BlueAir
COMMERCIAL REFRIGERATION
223 W. Rosecrans Ave., Gardena, CA 90248
Toll Free 1.866.677.8500 T. 310.808.0102, F.310.808.0242
www.blueairinc.com | info@blueairinc.com

PROJECT :	
MODEL # :	
ITEM # :	QTY :
AVAILABLE W/H :	
APPROVAL :	

Safes / Anti - Burglar & Fire Resistant

BSF70E

BSF50E

BSF30E

STANDARD FEATURES

- FINANCIAL AND SMALL BANKING INSTITUTIONS
- HEAVY DUTY COMPOSITE CONSTRUCTION(4 1/4")THICK DOOR & 3" THICK BODY)
- CARBURIZED HARD PLATE AND INDEPENDENT GLASS RELOCKING DEVICE
- MASSIVE 1 1/4" CHROME PLATED LOCKING BOLTS
- HEAVY DUTY HINGES
- PRE DRILLED ANCHOR -DOWN HOLES FOR MORE SECURITY
- CHROME PLATED 3-SPOKE HANDLE
- ADJUSTABLE STEEL SHELF
- UL-1 HOUR FIRE RESISTANT TEST PASSED
- EASY TO USE ELECTRONIC LOCK

Model	Exterior Dimensions (inch / *mm*)			Lock	Net Weight (lbs / *kg*)
	Width	Depth	Height		
BSF30E	17 3/4" / *450*	20 1/2" / *520*	17 3/4" / *450*	Digital lock	165 / *45*
BSF50E	20" / *508*	20 1/2" / *520*	27" / *685*	Digital lock	370 / *168*
BSF70E	20" / *508*	22 1/2" / *578*	33 1/4" / *845*	Digital lock	608 / *276*

BULL SAFES

WARRANTY

90 Days Parts and Labor

APPROVALS:

AVAILABLE AT:

VER030115

PRODUCT SPECIFICATION

MODEL	LOCK SYSTEM	EXTERIOR (W x D x H) inch/mm	INTERIOR (W x D x H) inch/mm	WEIGHT (lbs / kg)
BSF30E	Digital Lock	17 3/4"x20 1/2"x17 3/4" / 450x520x450	12"x12 1/2"x12" / 305x318x305	165 / 75
BSF50E	Digital Lock	20"x20 1/2"x27" / 508x520x685	14 1/4"x12 7/8"x21 1/4" / 363x327x540	370 / 168
BSF70E	Digital Lock	20"x22 1/2"x33 1/4" / 508x578x845	14 1/4"x15 1/8"x27 5/8" / 363x385x700	608 / 276

* BLUE AIR has the right to change specifications without further notice.

- *Financial and small banking institutions*
- *Heavy duty composite construction (4 1/4" thick door, 3" thick body)*
- *Carburized hard plate and independent glass relocking device*
- *Massive 1 1/4" chrome plated locking bolts*
- *Heavy duty hinges*
- *Pre-drilled anchor-down hole for more security*
- *Chrome plated tri-spoke handle*
- *Comes with back-up power packs*
- *Adjustable steel shelf*
- *UL-1 hour fire resistant test passed*
- *Easy to use electronic lock*
- *3 spoke chrome-plated vault handle*

PLAN VIEW

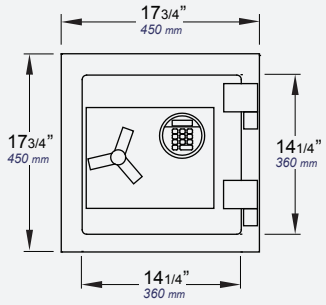

[BSF30E]

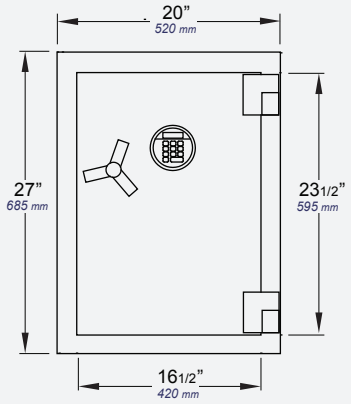

[BSF50E]

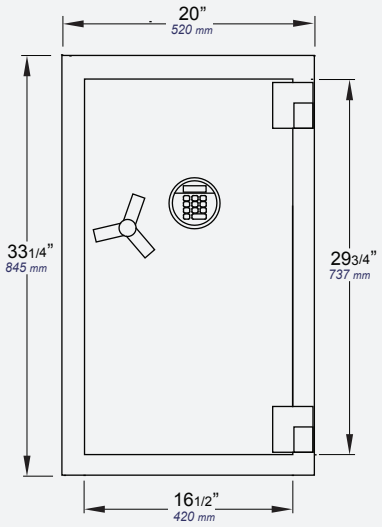

[BSF70E]

Blue Air COMMERCIAL REFRIGERATION

223 W. Rosecrans Ave., Gardena, CA 90248
Toll Free 1.866.677.8500 T. 310.808.0102, F.310.808.0242
www.blueairinc.com | info@blueairinc.com