Your Solutions Partner

Specifications

F.O.B Sedalia, Missouri 65301

E302

OPTIONS:

- ❑ 3-phase wiring
- ❑ 1,000 watt elements
- ❑ Stainless steel heat compartment liner - **FMOD-SS-LINER**
- ❑ Stainless steel cutting board in lieu of poly
- ❑ Hardwood cutting board in lieu of poly
- ❑ Drop type brackets for cutting board
- ❑ Casters - **EPxxx**
- ❑ Stainless steel feet -**SS-FEET**
- ❑ Serving shelves - **656-x,S, 656-460-xS, 956-xS, 956-460-xS**
- ❑ Glass display shelves - **98x**
- ❑ Shelves/Carving boards - **441-xS, 442-xS, 445-xS**
- ❑ Buffet shelves - **63x/73xFL/73xBL/73xHT/83x/93xFL/83xBL/93xHT**
- ❑ Adapter plates - **31, 32, 33**
- ❑ Insets/Inset Covers **- 521, 522, 523**
- ❑ Telescope covers - **546, 548**
- ❑ Tubular tray slides - **3BTS-FX-x/HD-x**
- ❑ Spillage pans - **576, 676**
- ❑ Solid stainless tray slides - **SOLID-FX/HD**

AGENCY LISTINGS:

CLASSIFIED UL EPH c UL US LISTED

DUKE MANUFACTURING CO.
2305 N. Broadway
St. Louis, MO 63102

800.735.3853 Toll Free
314.231.5074 Fax
www.dukemfg.com

Approval Stamp(s):

PRODUCT INFORMATION:
PROJECT: _____
ITEM: _____
QUANTITY: _____

MODEL:
Aerohot™ Steamtables
Hot Food Units - Electric

❑ **E302/EP302**	2 top openings
❑ **E303/EP303**	3 top openings
❑ **E304/EP304**	4 top openings
❑ **E305/EP305**	5 top openings

TOP:

- 20 gauge, 300 Series stainless steel
- Die-stamped openings - 12" x 20"
- Poly carving board - 7"W x 1/2" thick with 18 gauge stainless steel support base and die-stamped brackets

HEAT COMPARTMENTS:

- Each with die-formed 8" deep galvanized liner
- Insulated with 1" thick fiberglass or equal, all four sides and bottom
- Single phase standard

BODY AND INTERIOR SHELF:

- 20 gauge, 430 Series stainless steel body
- 20 gauge, 430 Series stainless steel undershelf
- 430 Series stainless steel tubular legs with adjustable plastic feet

ELECTRICAL INFORMATION:

- ❑ 500 or 750 watt dome-type element for each compartment
- ❑ Wired to operate on 120, 208 or 240 Volt
- ❑ Single or Three phase
- AC current
- Each section with infinite switch
- Permanently wired, 6' long cord and plug provided

SHORT FORM SPECIFICATIONS:

Aerohot™ Steamtables - Hot Food - Electrical. Top shall be constructed of 20 gauge, 300 Series stainless steel with body, undershelf and legs formed of heavy gauge 430 Series stainless steel. Top to have die-stamped openings measuring 12" x 20" with 8" deep galvanized liner. Each compartment to be insulated on all four sides and bottom with 1" thick fiberglass or equal, having thermal conductivity of 0.27 or less, with single phase standard. Each compartment to have 500 or 750 watt dome-type element fitted inside, above warming compartment. Wired to operate on 120, 208 or 240 volt, single or 3 phase. AC current, as ordered. Each section to be controlled by infinite switch. Permanently wired, 6' cord with plug provided. Units to be furnished with poly carbonate carving board measuring 7" x 1/2" thick with 18 gauge stainless steel support base and die-stamped brackets. Portable units to have NSF listed casters, 5" diameter, rubber, swivel type, two with locks, all non-marking tires, with 9"L pusher bar attached to end panel on operator's right.

"P" - prefix on model number denotes portable unit.

Catalog No. AFS-ELECHOT

A.I.A. File No. 35-C-13

A.I.A. File No. 35-C-13

Catalog No. AFS-ELECHOT

AEROHOT™ STEAMTABLES - HOT FOOD UNITS - ELECTRIC

Aerohot

MODEL:
Aerohot™ Steamtables
Hot Food Units - Electric

- ❑ **E302/EP302** 2 top openings
- ❑ **E303/EP303** 3 top openings
- ❑ **E304/EP304** 4 top openings
- ❑ **E305/EP305** 5 top openings

LEGEND
▲ - ELECTRICAL CONNECTION
"P" = prefix on model number denotes portable unit

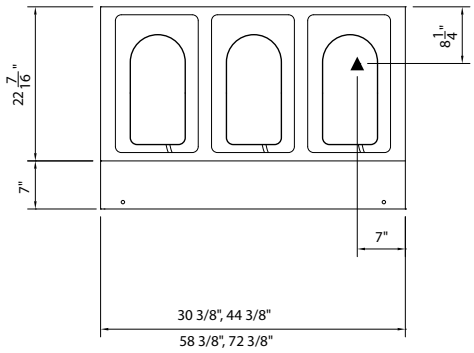

TOP VIEW

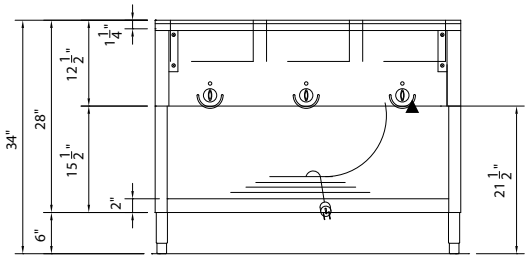

FRONT VIEW

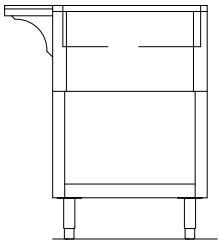

RIGHT SIDE VIEW

DIMENSIONS:

Freight Class: 85

Model	Length		Width		Height		Top Open-ings	Cube ft. Crated	Weight	
	in.	cm	in.	cm	in.	cm			lbs.	kg
E302/EP302	30-3/8	77.2	22-7/16	57.1	34	86.4	2	23.4	81/90	36.8/40.9
E303/EP303	44-3/8	112.8	22-7/16	57.1	34	86.4	3	32.5	107/114	48.6/51.8
E304/EP304	58-3/8	148.3	22-7/16	57.1	34	86.4	4	41.5	138/114	62.7/65.5
E305/EP305	72-3/8	183.9	22-7/16	57.1	34	86.4	5	50.5	165/172	75.0/78.2

ELECTRICAL SPECIFICATIONS:

Model	120 Volt - 500 watt elements			208 Volt - 750 watt elements			240 Volt - 750 watt elements		
	Watts	Amps	NEMA	Watts	Amps	NEMA	Watts	Amps	NEMA
E302/EP302	1000	8.3	5-15	1500	7.2	6-20	1500	6.3	6-20
E303/EP303	1500	12.5	5-15	2250	10.8	6-20	2250	9.4	6-20
E304/EP304	2000	16.7	L5-30	3000	14.4	6-20	3000	12.5	6-20
E305/EP305	2500	20.8	L5-30	3750	18.0	L6-30	3750	15.6	6-20

Cord and NEMA plug included

DUKE MANUFACTURING CO.
2305 N. Broadway
St. Louis, MO 63102

800.735.3853 Toll Free
800.231.1130 In Missouri
314.231.5074 Fax
www.dukemfg.com

Your Solutions Partner

Specification subject to change

01/10
Printed in U.S.A

© 2010, Duke Manufacturing Co.