BOTTOM MOUNT REACH–IN DUAL TEMPS

Bottom Mounted Condensing Unit

EB – Series • EBWRFH2 • EBRF2 • EBRF2-D • EBRF3

EVEREST REFRIGERATION

www.EVERESTref.com

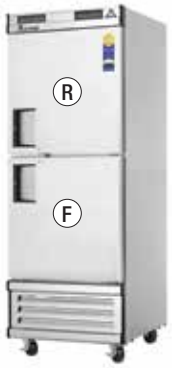

EBWRFH2

EBRF2

EBRF2-D
(Deep Series)

EBRF3

Cabinet Construction

Heavy duty stainless steel interior and exterior, with galvanized steel finished top, bottom and back wall of exterior. ABS evaporator drain cover. 2.5" thick high density foamed-in-place polyurethane insulation. Four 4"diameter casters (front casters with brakes). Door heater installed around inside cabinet frame to prevent moisture build-up.

Refrigeration System

- Bottom mounted condensing unit
- Oversized condenser and evaporator coils quickly achieve and maintain desired temperature
- Forced-air cooling with multiple evaporator fan motors providing balanced airflow throughout cabinet to ensure faster temperature drop
- Environmentally friendly CFC free R-134A and R-404A refrigerant
- Adjustable, time initiated defrost cycle of 3 to 12 hours with 350 watt defrost heater, both time and temperature terminated for fail-safe operation
- Automatic evaporator fan motor delay after defrost cycle
- Copper tube and aluminum fin evaporator with anti-corrosive coating
- Energy efficient condensate drain pan with wicking pads for self sufficient condensation removal
- Pressure relief ports for rapid cabinet re-entry
- Interior airflow backguard to ensure proper air circulation
- Pre-wired and ready to plug, 115V/60Hz/1Ph, NEMA 5-15P

Doors

- Heavy duty stainless steel interior and exterior
- 2.5" thick high density foamed-in-place polyurethane insulation
- Heavy duty adjustable torsion spring self-closing door system
- One piece snap-in magnetic door gaskets for easy replacement
- Heavy duty recessed door handles
- Door locks
- Field reversible doors

Lighting

- Shielded incandescent interior lighting

Shelving

- Epoxy coated wire shelves *(see reverse page for shelf quantity)*
- Stainless steel pilasters and shelf clips

Temperature Control

- Factory preset temperature, 35˚F for refrigerators and –4˚F for freezers
- Temperature setting range from 33˚F to 54˚F for refrigerators and –10˚F to 54˚F for freezers
- Easy to read digital temperature display
- Easy to program push button temperature control
- Microchip digital control and monitoring system with a variety of functions to monitor and maintain optimum temperature

- Project / Customer _____
- Item No. _____
- Model No. _____

Warranty

5 Year — Compressor Warranty
3 Year — Parts & Labor Warranty
Applicable to units purchased after July 1, 2014.

Contact

201 W. Artesia Blvd, Compton, CA 90220
T. (310) 323–6586, (800) 444–6285
F. (310) 323–7524, (310) 761-1127

BOTTOM MOUNT REACH–IN DUAL TEMPS

Bottom Mounted Condensing Unit

EB – Series • EBWRFH2 • EBRF2 • EBRF2-D • EBRF3

www.EVERESTref.com

Dimensions

SIDE VIEW

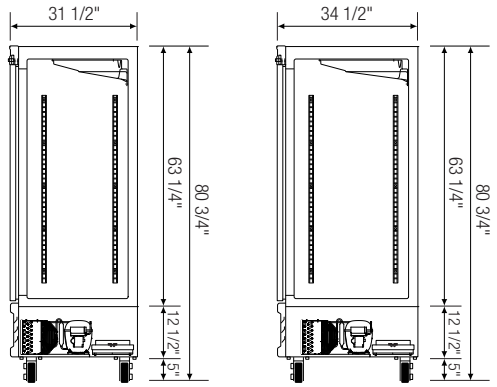

Deep Series

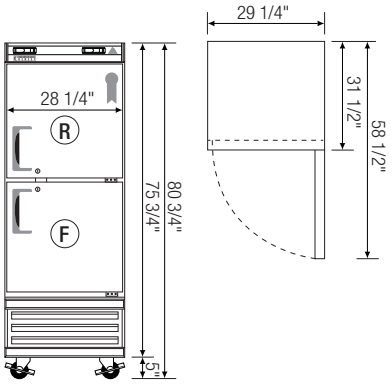

▲ **EBWRFH2**

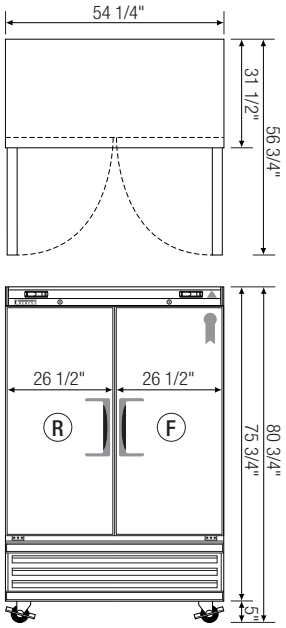

▲ **EBRF2**

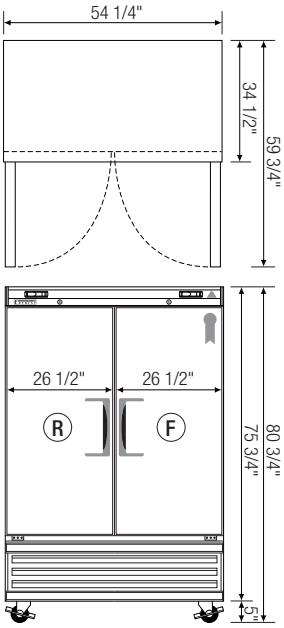

▲ **EBRF2-D**
(Deep Series)

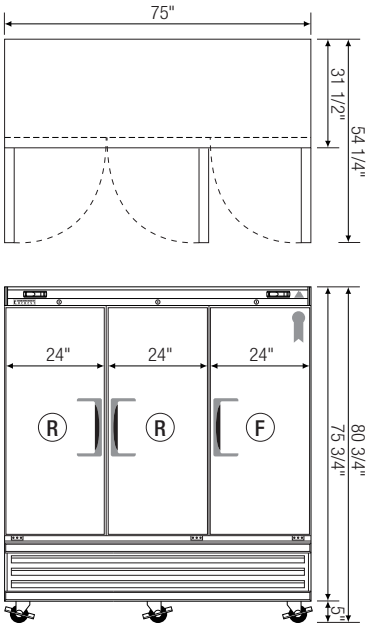

▲ **EBRF3**

Model	Ref/ Frz/ Dual	# of Doors	Capacity (Cu.Ft.)	HP	Refrigerant	# of Shelves	Power (V-Hz-Ph)	Amps	Crated Weight (LBS)	Exterior Dimensions (Inches)		
										L	D	H *
EBWRFH2	Dual	2(H)	9.64(Ref) 9.04(Frz)	1/2+	R-404A	2	115-60-1	7.76	316	29 1/4	31 1/2	75 3/4
EBRF2	Dual	2	20(Ref) 20(Frz)	1/4(Ref) 1/2+(Frz)	R-134A(Ref) R-404A(Frz)	6	115-60-1	11.08	529	54 1/4	31 1/2	75 3/4
EBRF2-D	Dual	2	22(Ref) 22(Frz)	1/3(Ref) 1/2+(Frz)	R-134A(Ref) R-404A(Frz)	6	115-60-1	12.95	573	54 1/4	34 1/2	75 3/4
EBRF3	Dual	3	38(Ref) 19(Frz)	1/3+(Ref) 1/2+(Frz)	R-134A(Ref) R-404A(Frz)	9	115-60-1	14.06	592	75	31 1/2	75 3/4

* Height does not include 5" for casters

Ref = Refrigerator
Frz = Freezer
Dual = Ref & Frz Combo
H = Half Door

Disclaimer: Product dimensions are for general purposes and not absolute value. Slight variations may exist. If dimensions are critical, please contact Everest.