IMPERIAL

Project #: _____

Item #: _____

AIA File #:

Specification #:

36" Restaurant Range Series

Model Numbers

❑ IR-6	❑ IR-4-G12	❑IR-2-G24	❑ IR-G36
❑ IR-6-C	❑ IR-4-G12-C	❑IR-2-G24-C	❑ IR-G36-C
❑ IR-6-XB	❑ IR-4-G12-XB	❑IR-2-G24-XB	❑ IR-G36-XB
❑ IR-4-RG12		❑IR-4-S18	
❑ IR-4-RG12-C		❑IR-4-S18-C	
❑ IR-4-RG12-XB		❑IR-4-S18-XB	

Model IR-6

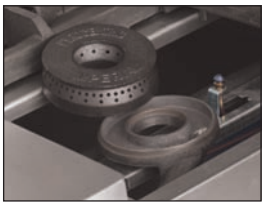

Burner heads remove for easy cleaning.

Restaurant Range Features

- Stainless steel front, sides, backguard, shelf, landing ledge and kick plate.
- Welded stainless steel seams.
- Large 5" (127) stainless steel landing ledge.
- 6" (152) heavy duty legs with adjustable feet.
- One year parts and labor warranty.
- AGA and CGA design certified, NSF and CE listed.

Cooktop - Open Burner Features

- PyroCentric™ burner heads with two rings of flame for even cooking no matter the pan size.
- PyroCentric burners are 28,000 BTU/hr (8 KW) with a 7,000 BTU/hr. (2 KW) low simmer feature.
- Cast iron burners are anti-clogging and removable for easy cleaning.
- No gaskets or screws.
- Grates are in 12" x 12" (305 x 305) sections to easily lift off for cleaning.
- Anti-clogging shield designed in the grate protects the pilot from grease and debris.
- Pots slide easily from section to section.

Standard Oven Features

- Chef depth standard oven interior accommodates standard 18" x 26" (457 x 660) sheet pans front-to-back and side-by side. Interior is 26 1/2" w x 26" d x 14" h (673 w x 660 d x 356 h).
- 100% safety pilot.
- Oven controls located on the side in cool zone.
- Manual oven shut-off valve.
- Heavy duty thermostat with temperature range from 150°F to 500°F. (65°C to 260°C).
- Porcelainized side, rear, deck and door lining.
- Unique baffle above the burner distributes heat flow to provide even cooking temperatures throughout the 35,000 BTU/hr. (10 KW) oven.
- Stamped inner door liner provides extra strength while optimizing heat retention.

Convection Oven Features (add suffix C)

- Convection oven with 1/4 hp blower motor is optional, cooks products faster and evenly with less shrinkage.
- Convection oven interior dimensions 26 1/2" w x 22 1/2" d x 14" h (673 w x 572 d x 356 h).
- Three position switch for cooking or cool down.
- Burner "ON" indicator light and one hour manual timer. Fan shuts off automatically when door is open.

All measurements in ( ) are metric equivalents.

Imperial Commercial Cooking Equipment
1128 Sherborn Street ■ Corona, CA 92879 ■ 800.343.7790 ■ Ph: 951.281.1830 ■ Fx: 951.281.1879
www.imperialrange.com ■ E-mail: imperialsales@imperialrange.com

Specification #:

AIA File #:

Imperial 36" Restaurant Range Series

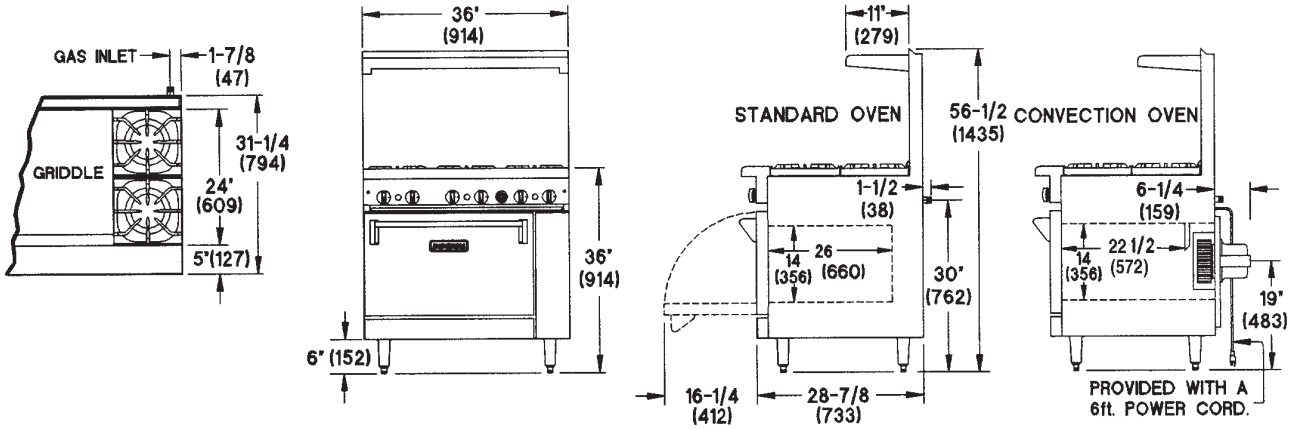

36" Restaurant Range Series Model#	Description	Total BTU	Total (KW)	Ship Wt. (Kg.)	 Lbs.
IR-6	6 Open Burners, 1 Standard Oven	203,000	(60)	(274)	605
IR-6-C	6 Open Burners, 1 Convection Oven	198,000	(58)	(301)	665
IR-6-XB	6 Open Burners, 1 Cabinet Base	168,000	(49)	(246)	545
IR-4-G12	4 Open Burners, 12" (305) Griddle, 1 Standard Oven	167,000	(49)	(283)	625
IR-4-G12-C	4 Open Burners, 12" (305) Griddle, 1 Convection Oven	162,000	(47)	(310)	685
IR-4-G12-XB	4 Open Burners, 12" (305) Griddle, 1 Cabinet Base	132,000	(39)	(256)	565
IR-2-G24	2 Open Burners, 24" (610) Griddle, 1 Standard Oven	131,000	(38)	(288)	635
IR-2-G24-C	2 Open Burners, 24" (610) Griddle, 1 Convection Oven	126,000	(37)	(314)	695
IR-2-G24-XB	2 Open Burners, 24" (610) Griddle, 1 Cabinet Base	96,000	(28)	(260)	575
IR-G36	36" (914) Griddle, 1 Standard Oven	95,000	(28)	(297)	655
IR-G36-C	36" (914) Griddle, 1 Convection Oven	90,000	(26)	(319)	705
IR-G36-XB	36" (914) Griddle, 1 Cabinet Base	60,000	(17)	(269)	595
IR-4-RG12	4 Open Burners, 12" (305) Raised Griddle, 1 Standard Oven	167,000	(49)	(283)	625
IR-4-RG12-C	4 Open Burners, 12" (305) Raised Griddle, 1 Convection Oven	162,000	(47)	(310)	685
IR-4-RG12-XB	4 Open Burners, 12" (305) Raised Griddle, 1 Cabinet Base	132,000	(39)	(256)	565
IR-4-S18	4 Extra Wide Open Burners, 1 Standard Oven	147,000	(43)	(272)	600
IR-4-S18-C	4 Extra Wide Open Burners, 1 Convection Oven	142,000	(42)	(298)	660
IR-4-S18-XB	4 Extra Wide Open Burners, 1 Cabinet Base	112,000	(33)	(244)	540

Range Dimensions: 36" (914) w x 37 1/2"(953) d x 36" (914) h. Height to cooking surface.
Crated Dimensions: 38 1/2" (978) w x 39" (991) d x 35" (889) h. All measurements in ( ) are metric equivalent.

Standard Exterior Specifications

■ **Stainless Steel:** Front, sides, landing ledge, control panel, backguard with shelf and kick plate. Welded and finished stainless steel seams. ■ **Control Knobs:** Durable cast metal, polished chrome finish. ■ **Legs:** Chrome plated 6" (152) legs with adjustable feet.

Range Tops Specifications

■ **Open Burners:** 28,000 BTU/hr. (8 KW) lift-off PyroCentric™ burner heads. No gaskets, no screws. One standing pilot for each burner. Removable one piece drip tray. ■ **Top Grates:** 12" x 12" (305 x 305) lift-off sections, heavy-duty cast iron. Cast-in bowl directs heat upward. Top grate design includes an integrated pilot shield.
■ **Griddles:** Highly polished 3/4" (19) plate with 3" (76) wide stainless steel grease though. 20,000 BTU/hr. (6 KW) burner for every 12" (305) of griddle surface, located on the left side of the range top. Manual controls standard, thermostatic controls optional.
■ **Raised Griddle with Broiler:** Available in 12", 24" and 36" (305, 610, 914) widths. 3/4" (19) plate with manual control only. 20,000 (6 KW) BTU/hr. burner with heat deflector every 12" (305). Located on right side of range top. Large griddle grease can. Chrome plated broiler rack is removable. Large full width broiler drip tray.

Standard Oven Specifications

■ **Construction:** 12 gauge construction with welded front frame. Fully insulated with non-sag fiberglass. Porcelainized oven interior sides, rear, deck and door lining. Oven burner provides 35,000 BTU/hr. (10 KW). Unique baffle above the burner distributes heat flow to provide even cooking temperatures throughout the oven. 100% safety pilot. One heavy duty locking chrome plated rack.
■ **Controls:** Thermostat adjustable from 150°F to 500°F (65°C to 260°C). ■ **Dimensions:** 26 1/2" w x 26" d x 14" h (673 x 660 x 356).

Convection Oven Specifications

■ **Construction:** Same exterior as standard oven. 1/4 HP, 1725 RPM blower motor (120VAC-60 HZ - 1Ph) with 5 amp draw. Provided with 3-prong 6' (1829mm) power cord. 30,000 BTU/hr. (9 KW) "U" burner with electronic ignition. Includes three heavy duty chrome plated racks supported by chrome plated guides. Three-position switch for cooking or cool down; burner "on" indicator light; and one hour manual timer. ■ **Controls:** Thermostat adjustable from 150°F to 500°F. ■ **Dimensions:** 26 1/2" w x 22 1/2" d x 14" h (673 x 572 x 356).

Gas: Manifold pressure is 5.0" W.C. for natural gas or 10.0" for propane gas. Manifold size 3/4"(19) NPT. 3/4" (19) pressure regulator supplied with equipment to be installed at time of connection. Specify type of gas and elevation if over 2000 ft.

Clearance: For use only on non-combustible floors. Legs or casters are required for non-combustible floors; or 2" (51) overhang is required when curb mounted. Provide 0" clearance from non-combustible surfaces and 8" (203) from combustible surfaces.

Optional Items: ■ Extra chrome rack ■ Reinforcement channels for mounting cheese melter/salamander ■ 10" (254) stainless steel wok ring ■ Saute burner head ■ Wok burner head ■ 220V motor and transformer ■ Extra oven racks ■ Thermostatic griddle control (specify griddle size) ■ Grooved griddle top ■ Chrome griddle top ■ Griddle safety valve ■ Gas shut off valve 3/4" (19) ■ Quick disconnect and flexible gas hose ■ 6" (152) casters

Imperial Commercial Cooking Equipment

1128 Sherborn Street ■ Corona, CA 92879 ■ 800.343.7790 ■ Ph: 951.281.1830 ■ Fx: 951.281.1879

www.imperialrange.com ■ E-mail: imperialsales@imperialrange.com

© 2006 Imperial Commercial Cooking Equipment